scdi Scottish Council for Development and Industry

Young Engineers & Science Clubs Scotland

knots to WATTS

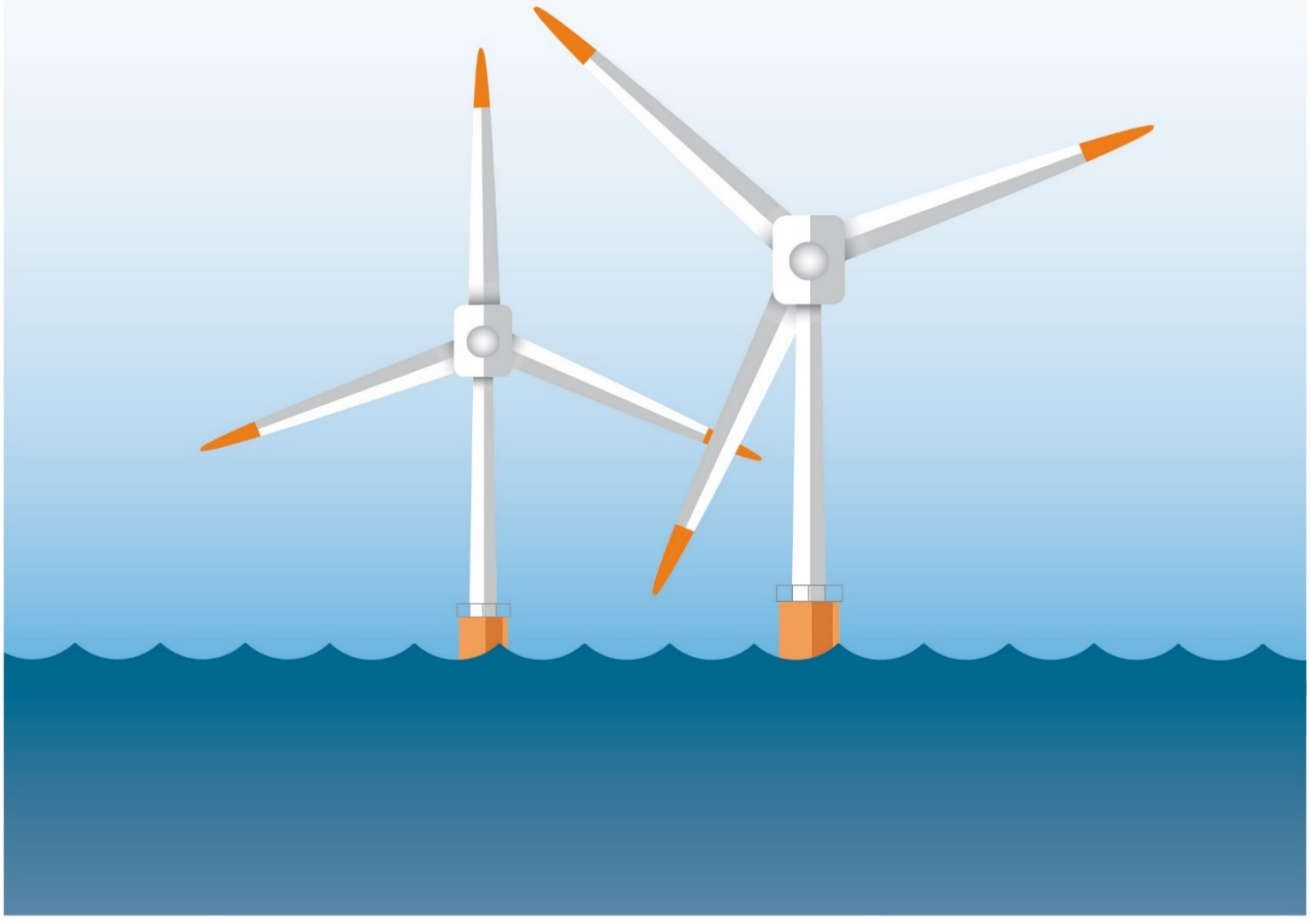

In partnership with:

IOP Institute of Physics In Scotland

2021 modifications

For 2021, teams are encouraged to do what any engineer does: the best they can, in the circumstances. What they don't do is give up!

The competition element will be done online in June. So you won't be able to test in our wind tunnel, with its large water tub. Perhaps you could use a hairdryer and a large bucket - at home, or in school. [For safety, keep the hairdryer and its lead away from water. It doesn't need to be hot air!]
We will want to hear:

- what you did
- why you did it
- what didn't work
- how well it works

You can reduce the size of the model, to fit your bucket. Try to make sure it floats; part of the game is to find a way to keep your turbine upright and stop it blowing over.

Try to direct the hairdryer *at* your turbine blades – turning them like the wind does. Don't point it sideways at the top of the blades.

If you can't wire up the generator, count how fast your blades go round.

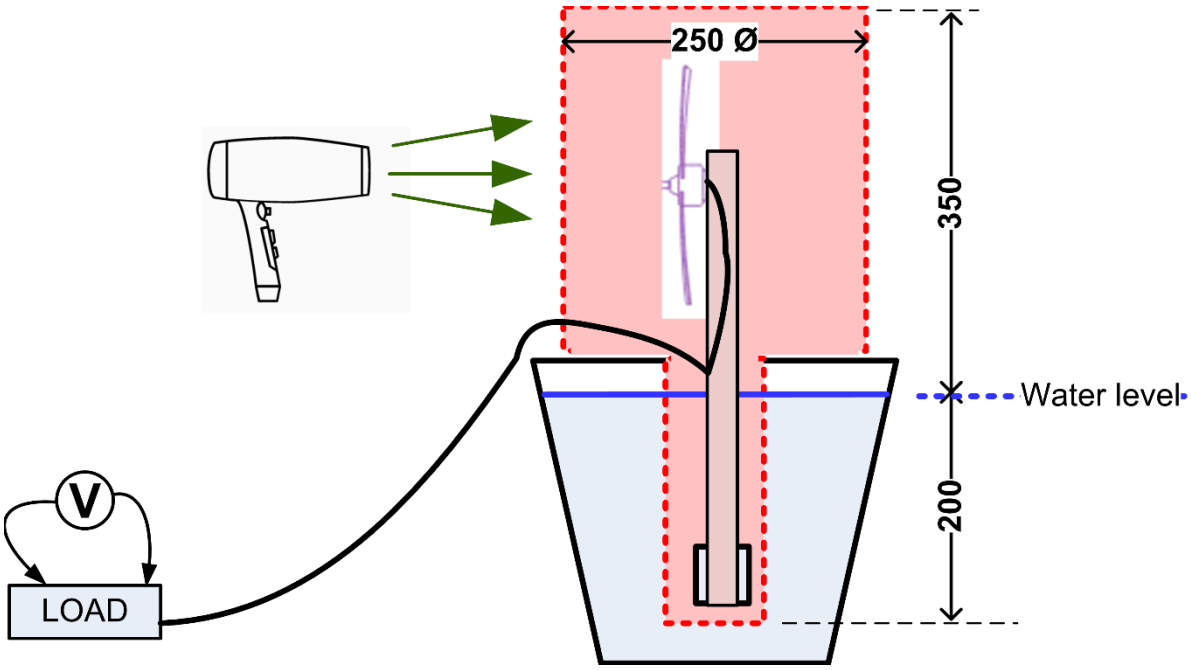

Good luck!

Primary and Secondary teams across Scotland are challenged to design and build a floating wind turbine and research offshore wind technologies.

BACKGROUND

Wind turbines on land are becoming a familiar sight, and provide 40% of Scotland's electricity. The Scottish Government have made an ambitious commitment for 50% of Scotland's heat, transport and electricity to be supplied from renewable sources by 2030. To achieve this, offshore wind is a key technology.

"A quarter of Europe's offshore wind crosses Scotland. This gives us huge potential for large-scale projects."
https://www.sdi.co.uk/business-in-scotland/key-sectors/renewables

The world's first floating offshore wind farm, Hywind Scotland, began production in October 2017.

Vattenfall's European Offshore Wind Deployment Centre in Aberdeen bay is Scotland's largest offshore wind test facility. The 92 MW 11-turbine scheme is trialling next generation technology and will boost the industry's drive to competitive clean power.

Offshore wind companies are at the forefront of innovation in design and installation of new technologies. New subsea foundations such as suction bucket jackets are being used to reduce costs and environmental impact. This video provides more information. As the industry progresses, wind turbines are being scaled up to produce more electricity than ever before.

THE CHALLENGE

4-person teams (Primary or Secondary) are challenged to:

1. **Produce a research portfolio on technologies being used for offshore wind**
2. **Design, build and test a floating wind turbine**

Following registration, a free resource kit of components to incorporate into your model will be sent to your school. We can provide one kit per school, while stocks last. A kit list with suppliers is provided if you wish to purchase further parts.

The challenge can be delivered within an extra-curricular club, or within the curriculum, to suit the school.

PRIZES

Teams are invited to demonstrate their model at the **Young Engineers & Science Clubs Virtual Knots to Watts Celebration of STEM** in June. STEM prizes are up for grabs!

HEALTH & SAFETY

Please note that it is teachers' responsibility to ensure activities are carried out safely, and to complete a risk assessment before undertaking practical activities. In addition to issues associated with cutting and drilling, we note the importance of **keeping mains equipment (like hair dryers and extension leads) away from water.** Please don't hesitate to get in touch if you require further guidance. Support is also available from SSERC: sts@sserc.org.uk

LEARNING

Working in a team to develop a solution to a current engineering challenge encourages pupils to explore exciting areas of STEM while developing valuable skills for learning, life and work.

There is ample scope for teachers to relate the learning to the CfE Curriculum. The following outcomes are particularly relevant:

SCN 3-04b By investigating renewable energy sources and taking part in practical activities to harness them, I can discuss their benefits and potential problems.

Physics N4 Generation of electricity
Research or investigate the factors affecting the electrical output from a range of sources, for example solar cells or wind turbines.

An all-class windmill activity is included, to help spread the word and encourage team recruitment.

SOME RULES

Part 1 – Floating Turbine

Your wind turbine model:

- Must float in water
- Must not exceed the **maximum** dimensions as shown in the diagram
- Must be moored to the three hooks using thin rubber bands
- It must use the motor/generator supplied in the kit
- Connecting wires, 1.5m long, should be attached near water level
- The output should be connected to the load circuit shown
- Gearing, to speed up rotation of the generator, is only permitted for the Secondary competition

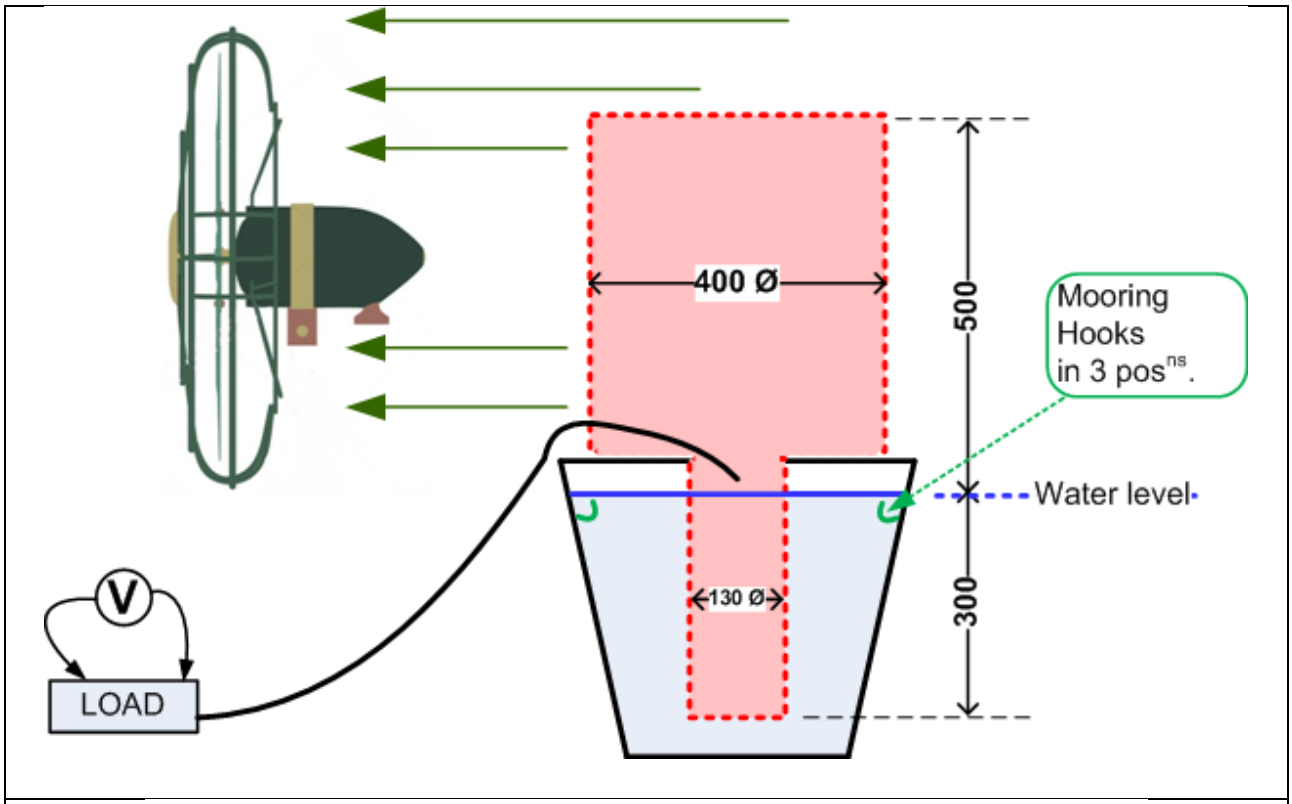

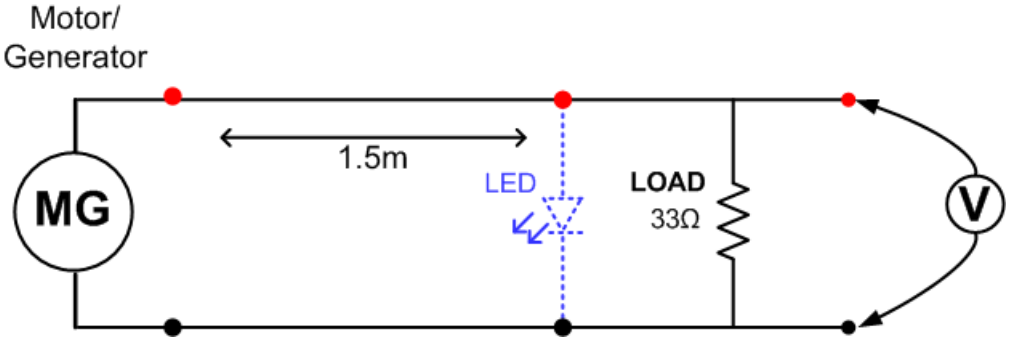

- The LED is optional, and will not be used for testing.
- The polarity of the generator depends on the direction of rotation! It only matters if you are using a LED.

Part 2 – Research Portfolio

You must produce a research portfolio which shows you have examined a range of technologies being developed for use with offshore wind turbines. Key research questions include:

- How have turbine technologies developed over the last 10 years?
- How do floating platforms compare with ones fixed to the seabed?
- How does a suction bucket work, and how does it compare to other types of foundation?

Teams will be required to give a **5 minute** presentation on their research portfolio, which will be followed by questions from the judges.

TESTING

Turbines will be tested in the wind tunnel below, which uses a 500mm 200W fan. **This sucks air out of the rear of the tunnel**, providing reasonably even wind speeds of up to $2.5ms^{-1}$ over the water tank.

The power output from the turbine will be measured over 1 minute, at both high and low wind speeds.

GETTING STARTED

Turbines: This competition is developed from the US-based 'KidWind Challenge'. A wealth of advice for pupils and teachers, along with lesson plans, is available on the KidWind website: https://www.kidwindchallenge.org/


Lesson 10

Which blades are best?

WHICH BLADES ARE BEST?

KEY CONCEPT

BACKGROUND

OBJECTIVES

TIME REQUIRED

GRADES

SUBJECTS

METHOD

MATERIALS

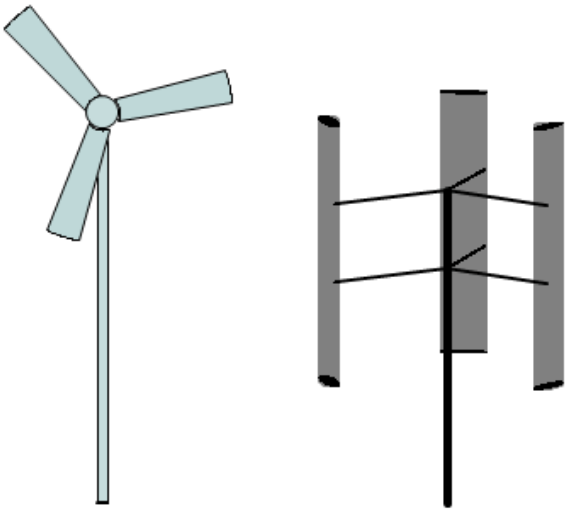

In this project, the Kidwind challenge is extended by requiring the wind turbine to float.

Research

The following questions may be useful prompts to get started:

- How much wind power is available near Scotland?
- What types of floating turbine have already been used? Spar/Barge/Tension leg
- What makes a floating platform (or a boat) stable?
- What determines the power generated by a wind turbine?

Aqua-RET: check out the **offshore wind technology** section of this e-learning tool:
http://www.aquaret.com/indexbd6e.html?option=com_content&view=article&id=155&Itemid=298&lang=en

Equinor's Hywind project off Peterhead:
https://www.equinor.com/en/what-we-do/hywind-where-the-wind-takes-us.html

The **International Renewable Energy Agency** 'FLOATING FOUNDATIONS: A GAME CHANGER'
https://www.irena.org/-/media/Files/IRENA/Agency/Publication/2016/IRENA_Offshore_Wind_Floating_Foundations_2016.pdf

The Conversation – online news articles, by researchers from industry and universities:
https://theconversation.com/floating-wind-farms-how-to-make-them-the-future-of-green-electricity-142847

This 3 minute video describes **Vattenfall's suction bucket**.

CONCEPT DEVELOPMENT

Think of some ideas and draw labelled sketches.
Discuss how it might work, what problems might arise and how they could be solved.

Models

Scale drawings or simple models will help you explore a few of the best ideas.
Try floating the models in water, and blowing on them to see how they respond.

Design and Materials

You can use further materials in addition to what's in the kit. For example: wood, metal, plastic or wire.

Self-Testing

Make your tests fair. Record the results.
You could test outside on a breezy day, or inside with a hair dryer. What is a wind speed of $2.5ms^{-1}$ like? Lesson 10 from the KidWind project, highlighted above, provides suggestions.

Develop

Choose the best design, which may use ideas from all of your prototypes. Identify the most important factors and vary or modify them systematically.

Panic Early

As in all engineering projects, time is limited. Don't waste time discussing what might happen or what might be best, when you have no real idea – try your ideas out, and find out what's important.

Read the Rules

Refer to the rules and guidelines throughout to ensure you're not disappointed at the competition finals.
Invite someone from outside your team to apply the rules to your design, one by one, and say whether they think you comply.

THE KIT

The free kit is to get you started and you can buy more of these parts if you want. You can use any material you like for your floating wind turbine, however, you must use the generator 37-0445, and use a 33 ohm load.

Rapid Online: https://www.rapidonline.com

37-0350	RVFM Steel Shafts 2mm Dia. X75mm
56-0445	Kingbright L-7113LSRD 5mm Super Bright Red LED Low Current
86-0405	Rapid 100 x 3mm Flat Bladed Screwdriver
85-4082	Uni-T Pocket Size Digital Multimeter Ut20b
86-6578	Bahco 218-BULK 218 Junior Hacksaw 150mm
62-8748	TruOhm 33R 1% 2W Flame Proof Metal Film Resistor
37-0373	RVFM 12mm Pulleys (2mm Bore)
37-0383	RVFM 30mm Pulleys (2mm Bore)
37-0445	TruMotion Low Inertia Motor 6V 2700 RPM
01-0435	Rapid GW010435 Equipment Wire Red 7/0.2 (100m Reel)
01-0400	Rapid GW010400 Equipment Wire Black 7/0.2 (100m Reel)
85-0610	Rapid Solder Wire 60/40 18SWG 1.2mm 500g Reel
03-0490	Unistrand 3mm Heat Shrink 3:1 Black 25m Reel

Screwfix: https://www.screwfix.com/

25545 3A TERMINAL STRIPS

ebay

Miniature Plastic Cog Gears with 2mm Shaft Hole,Type B (60 tooth cog)
Miniature Plastic Cog Gears with 2mm Shaft Hole,Type B (30 tooth cog)
PIPE CLIPS WHITE PLASTIC COATED 1"1/4 (32MM) 25 PACK
2.5mm / No 3 A2 ST STEEL SLOTTED CSK WOOD SCREWS DIN 97 No3x5/8"
50mm ID x 2mm Thick O Ring. Viton 75. Choose Quantity. 50x2.

Amazon

H&S 100 Wood Dowel Rods 30cm x 6mm Unfinished Natural Wood

This part is not in the kit but is useful: (3 week delivery)

Instruments Direct: https://www.inds.co.uk/

VR129896 KidWind Wind Turbine Hub

INTRODUCTORY CLASS ACTIVITY – Make a paper windmill

Kit: Pencil (with eraser, unsharpened), HAMA bead, 5mm map pin. Print template on 160gsm paper

Test with a hairdryer; measure how far away you can put your windmill, and still get it to turn.

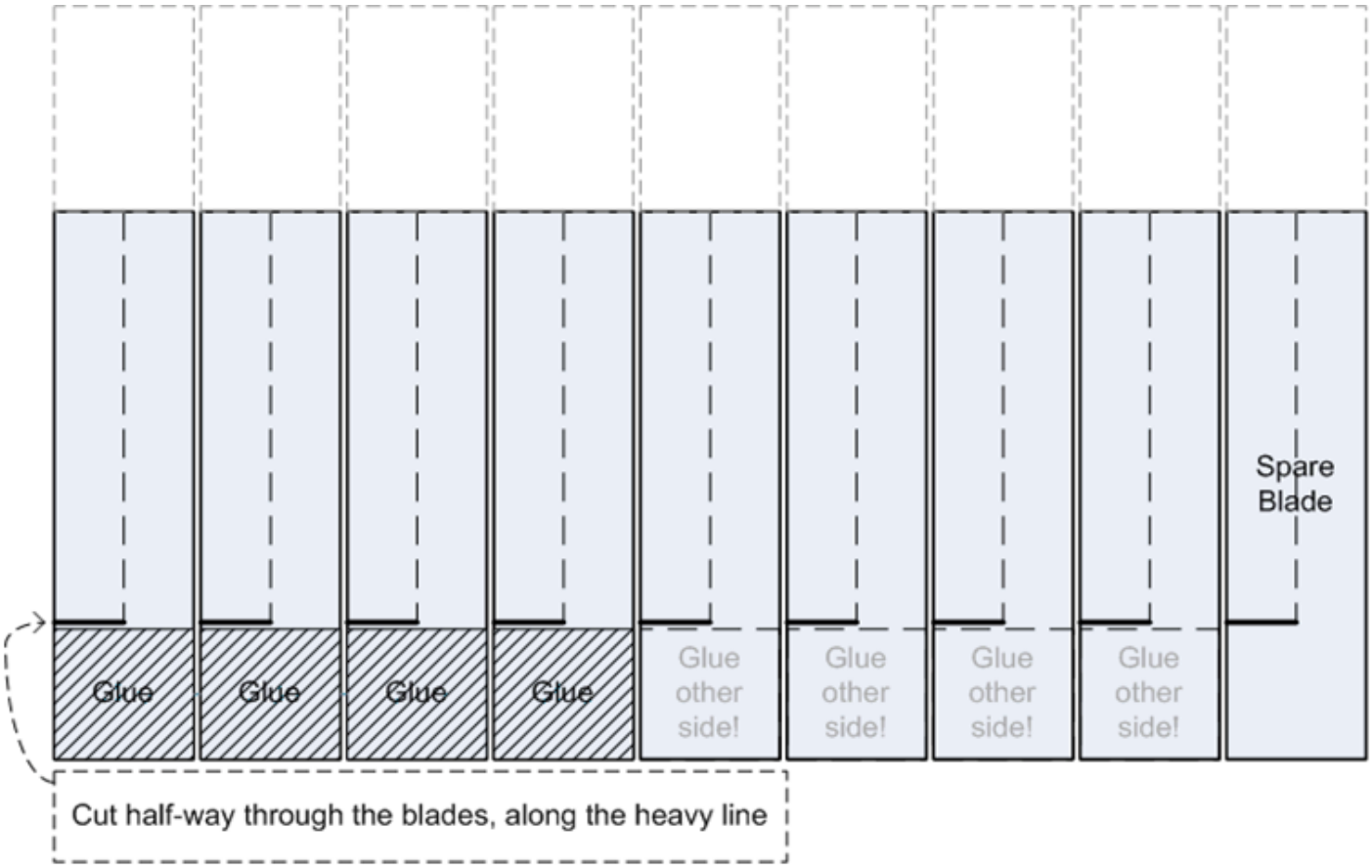

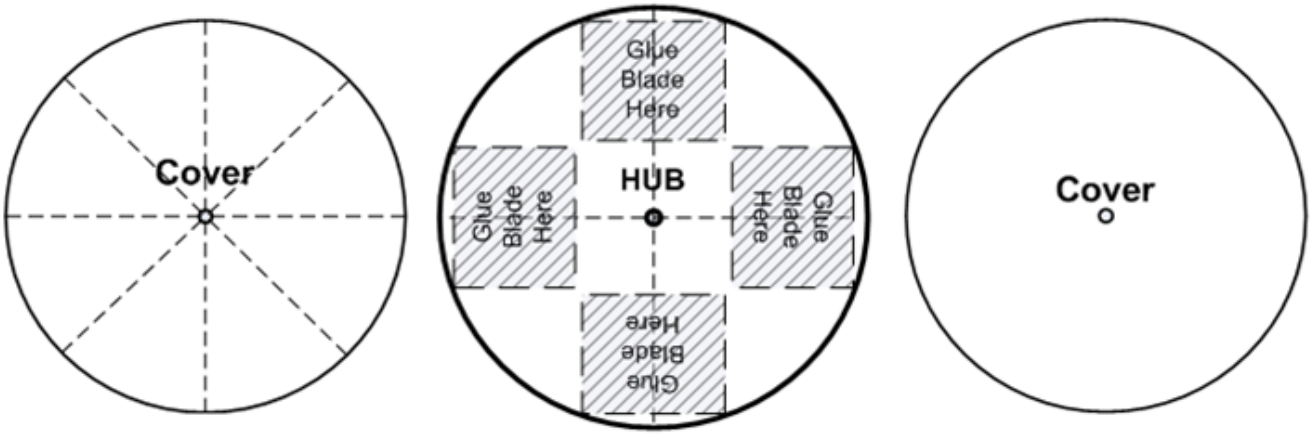

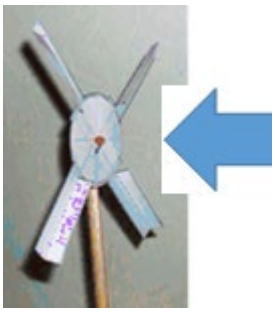

ANY QUESTIONS

We hope to make this competition accessible to everyone. We welcome innovation but if you are unsure whether your idea falls out with the spirit of the competition please get in touch in advance to avoid disappointment on the competition day! E-mail: yesc@scdi.org.uk

If you would like any help or advice please don't hesitate to get in touch and we'll be happy to help!

We'd love to see photos of teams working on the project throughout the year. Please e-mail yesc@scdi.org.uk or tweet @scdiYESC

Young Engineers & Science Clubs Scotland

Young Engineers and Science Clubs Scotland

Scottish Council for Development and Industry

1 Cadogan Square

Cadogan Street

Glasgow

G2 7HF

01463 218667

Email: yesc@scdi.org.uk

www.yecscotland.co.uk

@scdiYESC